FET

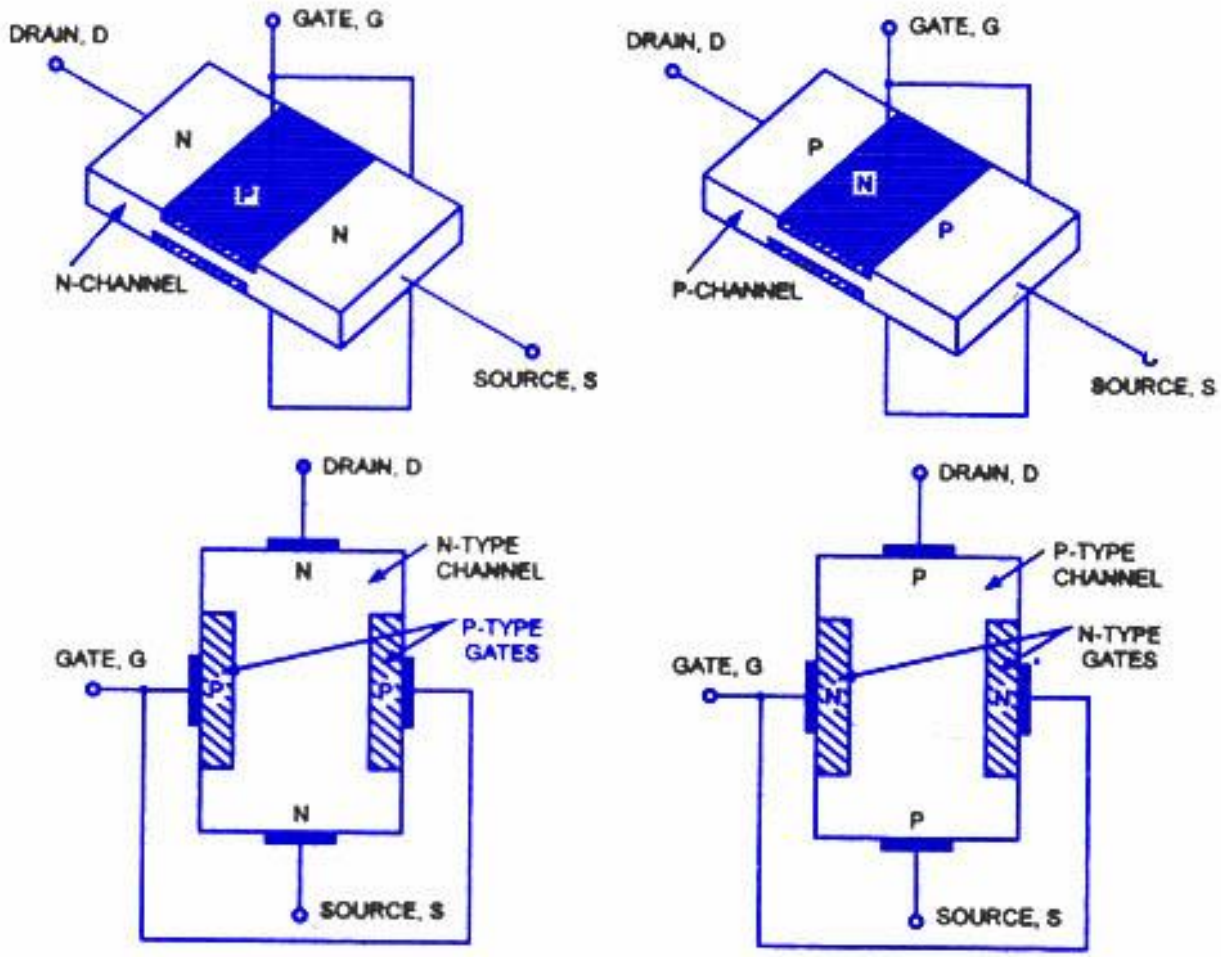

N-Channel JFET

P-Channel JFET

JFETs

IDS versus VDS Curves

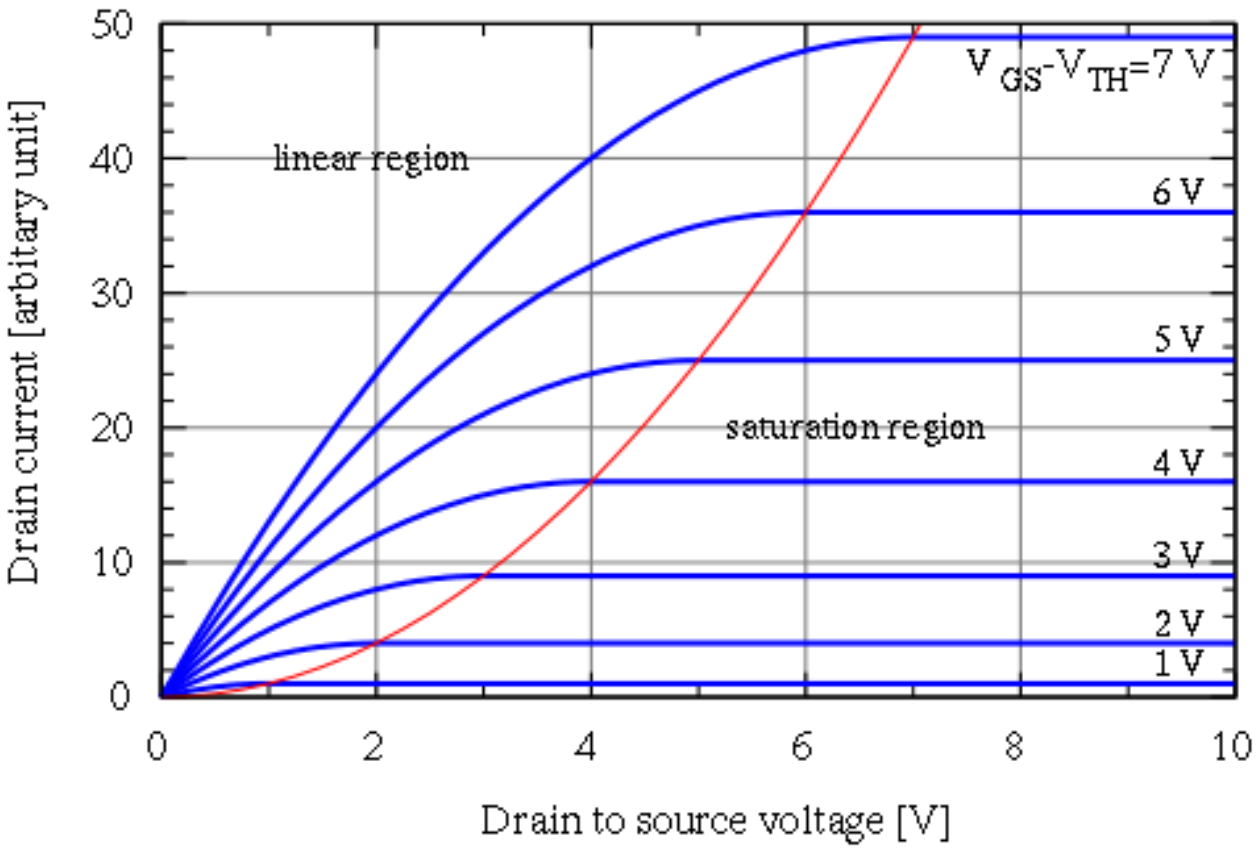

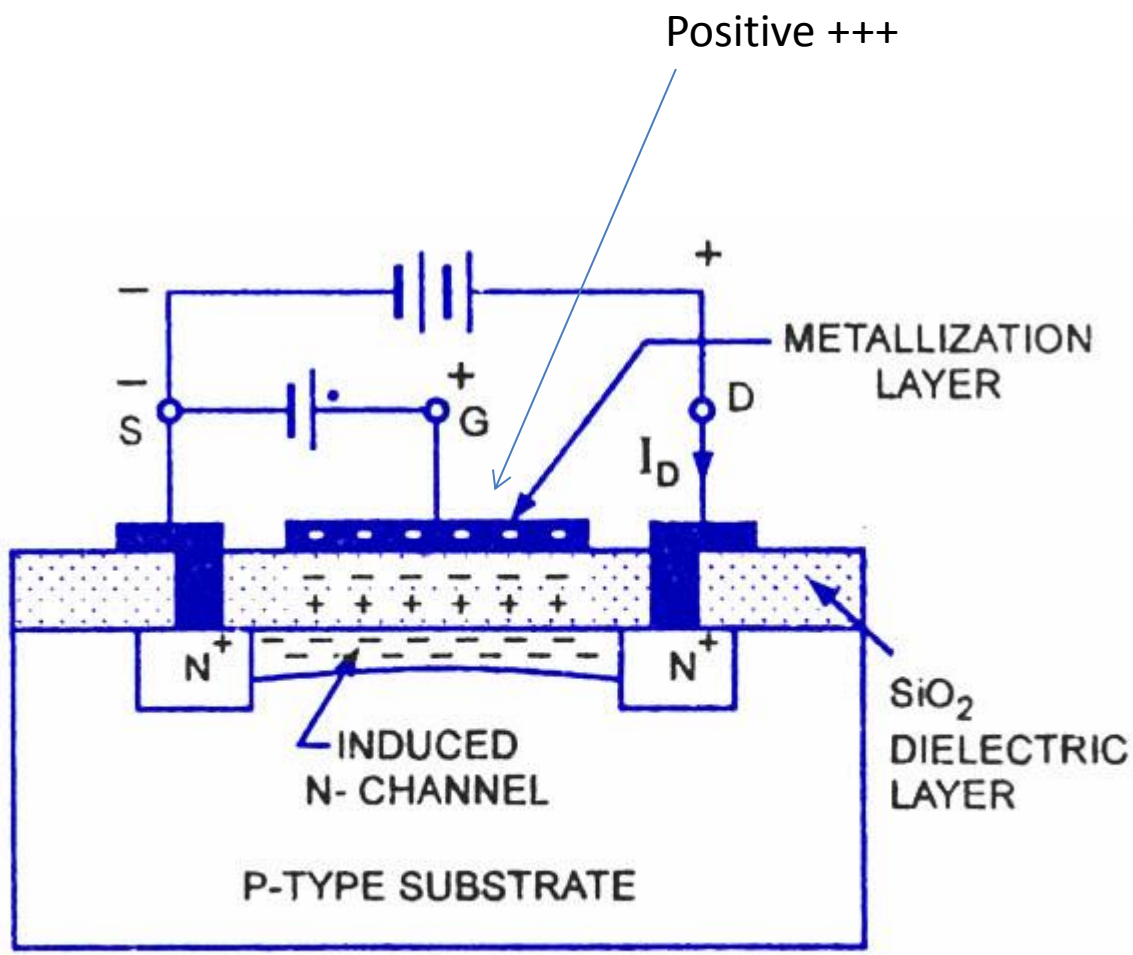

Operation of N-Channel E-MOSFET

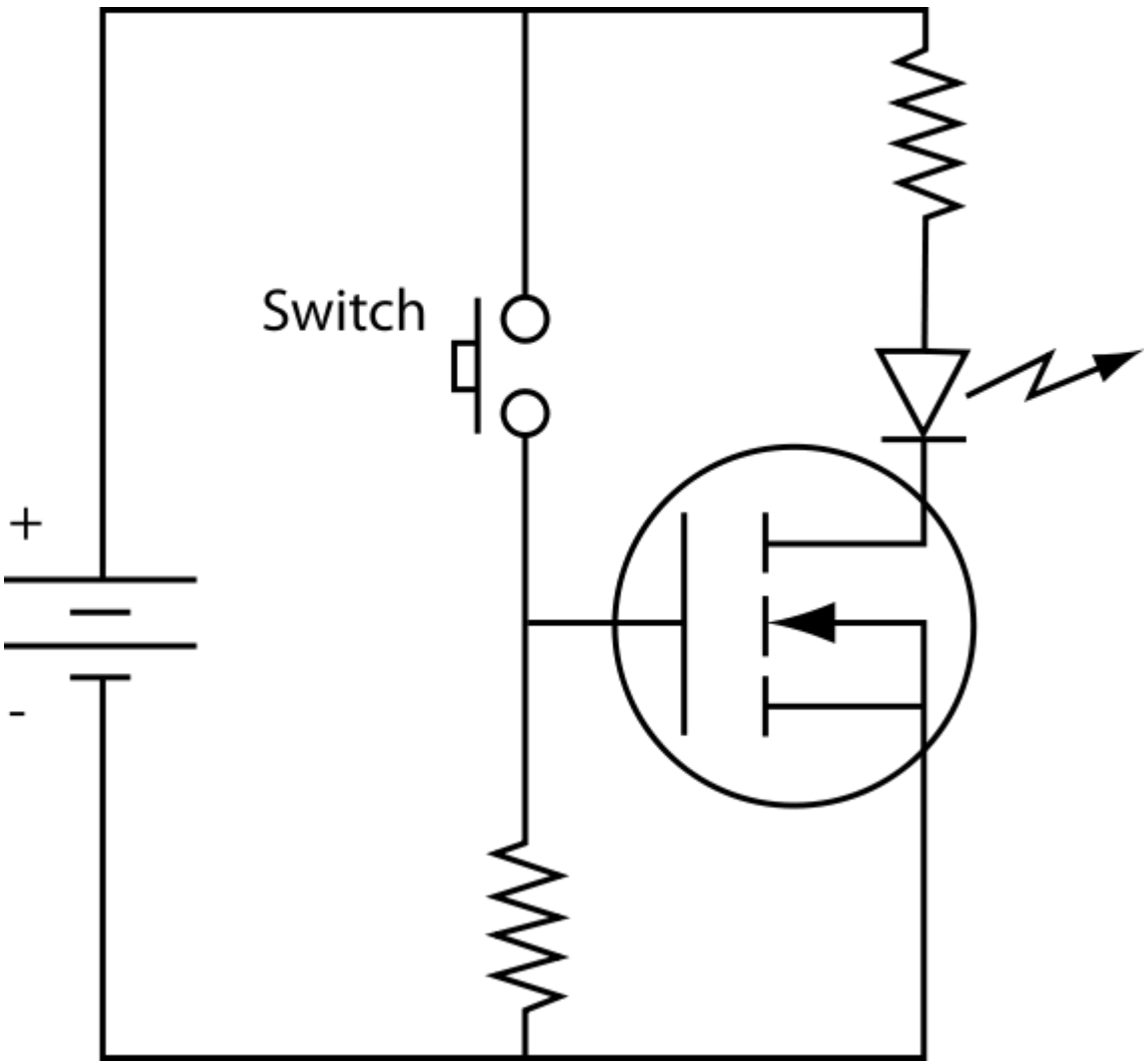
Switch
+
-

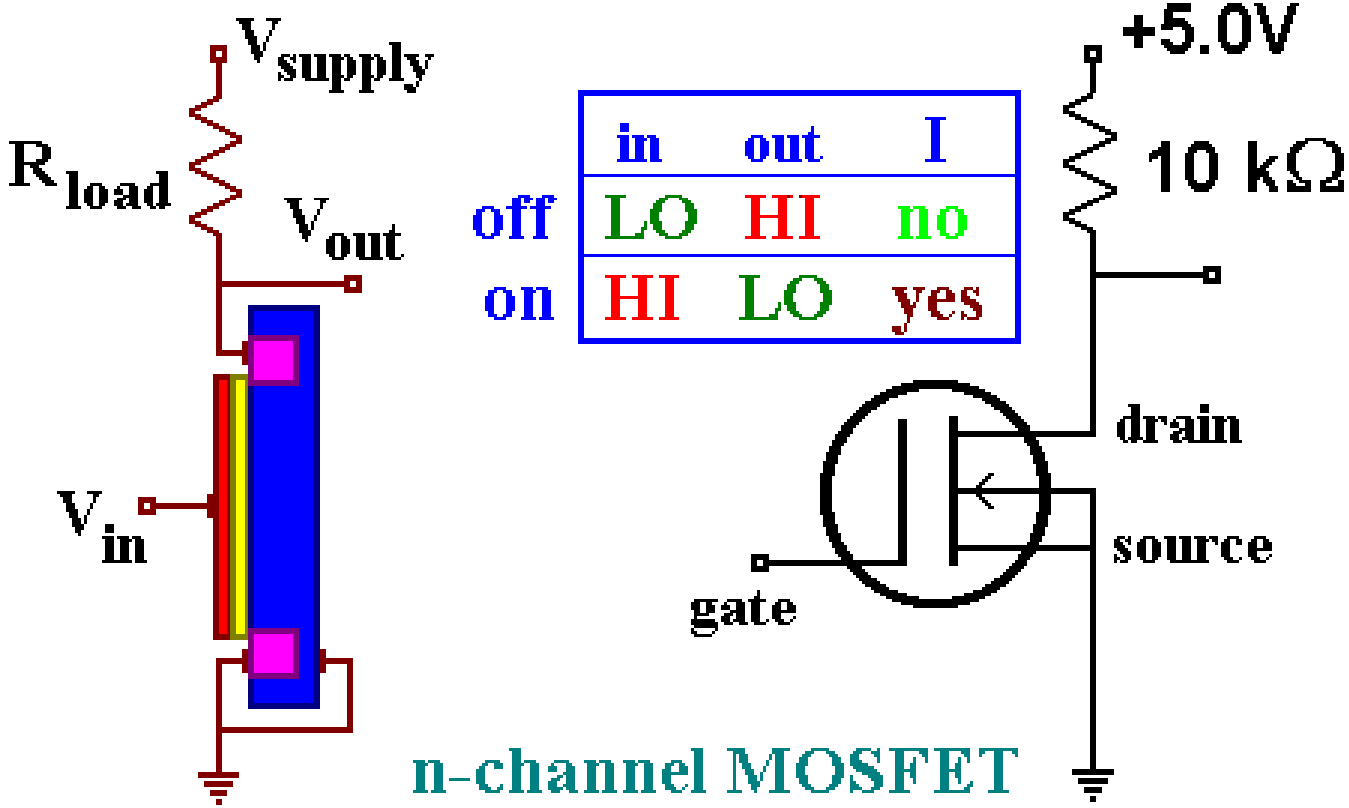

	in	out	I
off	LO	HI	no
on	HI	LO	yes

P channel MOS

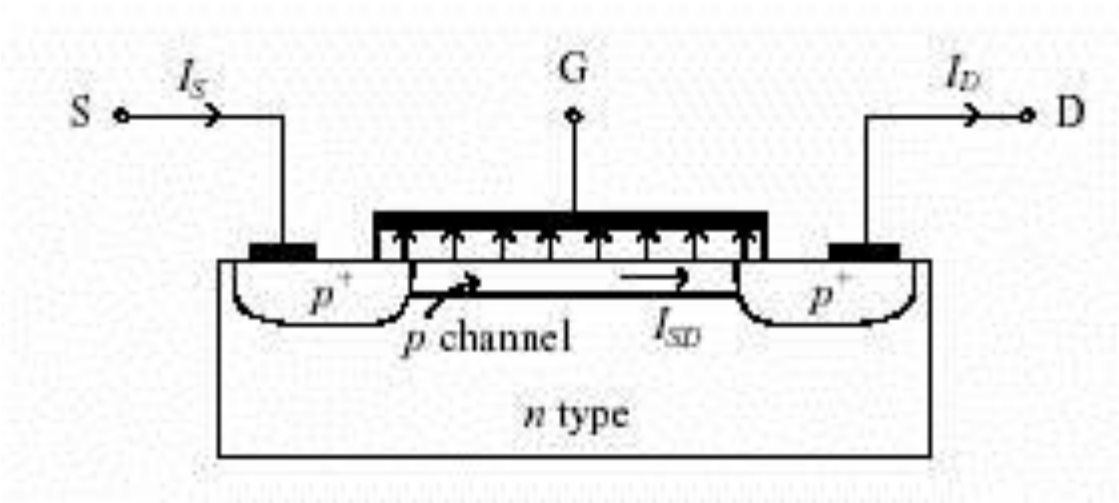

P Channel MOS

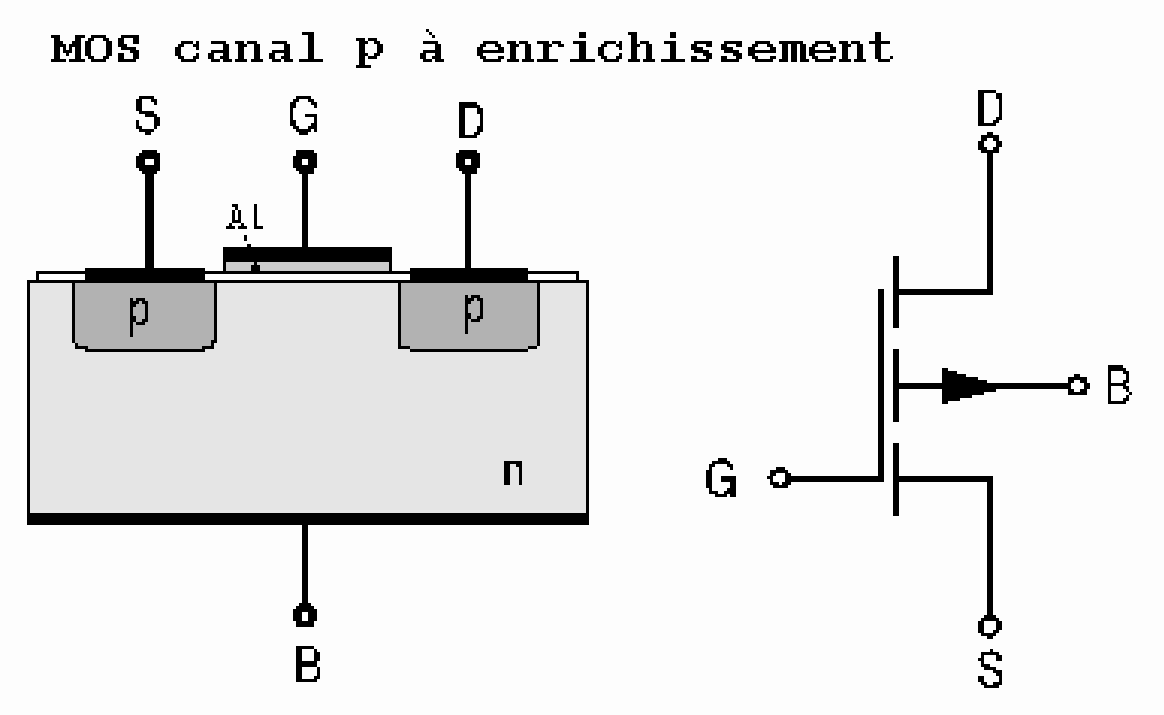

CMOS

Drain / Source Gebiete am Beispiel CMOS Inverter

PMOS enhancement ($V_{TH} < 0$ V)

NMOS enhancement ($V_{TH} > 0$ V)

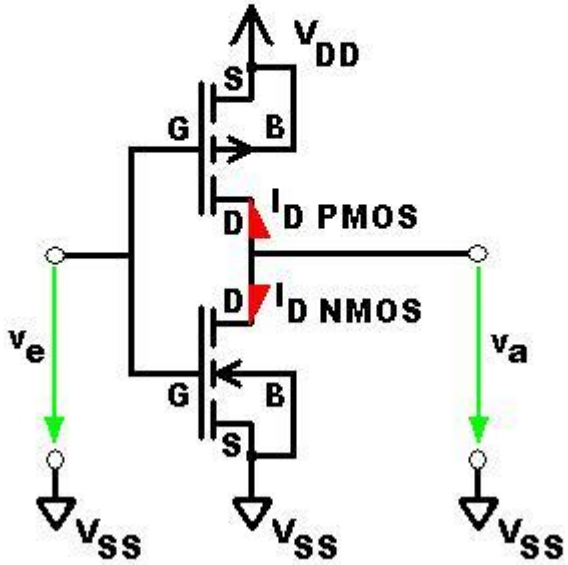

CMOS

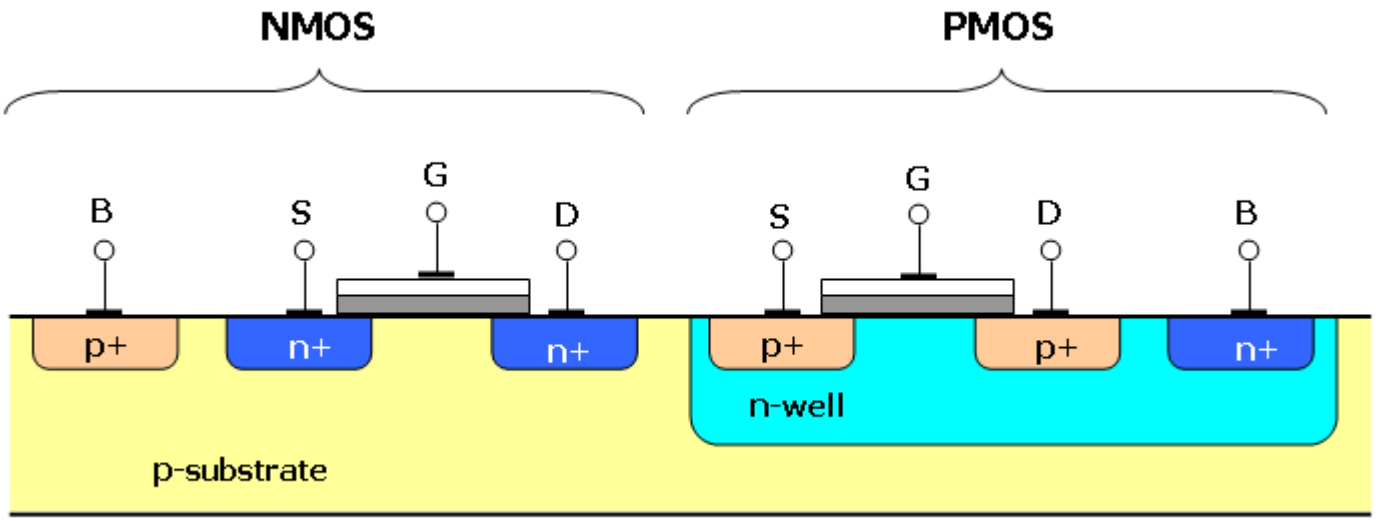

CMOS

CMOS NAND gate

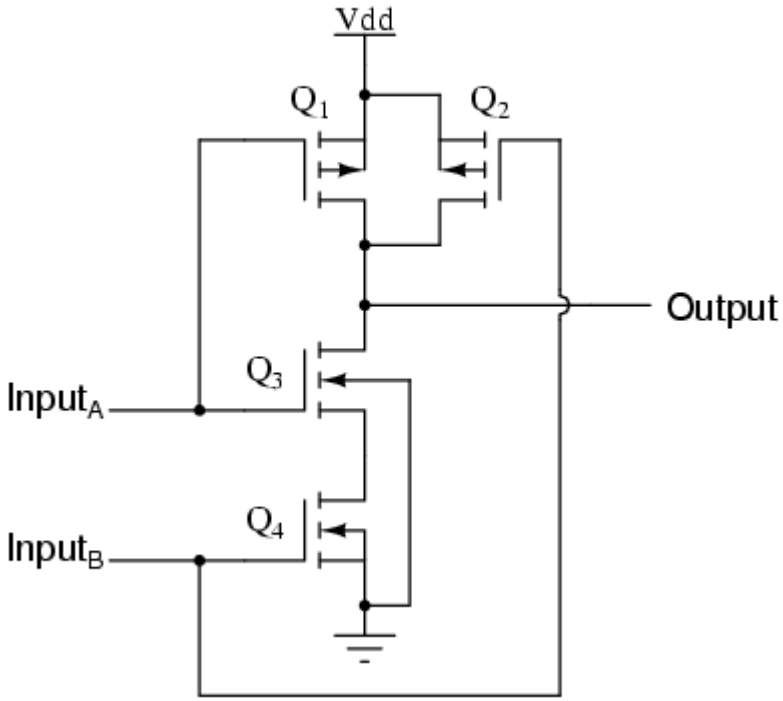

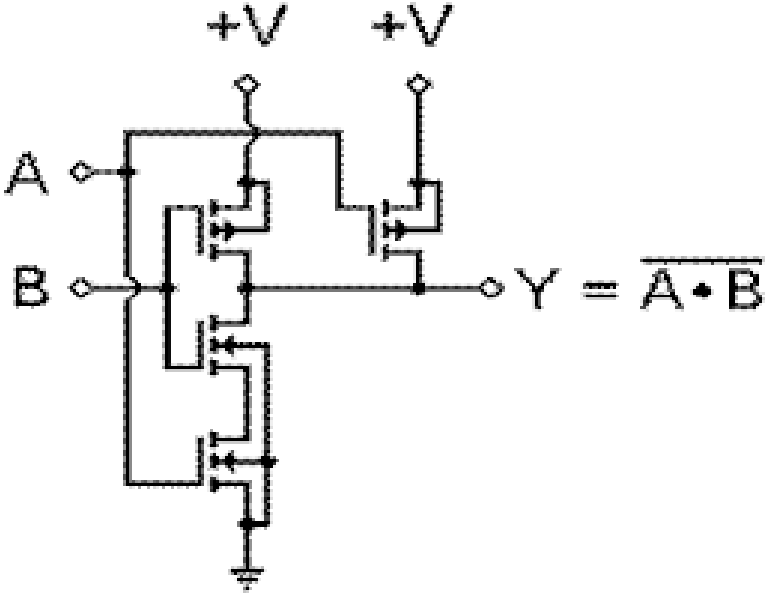

CMOS Digital family

2-input NAND gate

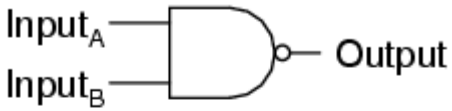

A	B	Output
0	0	1
0	1	1
1	0	1
1	1	0

Equivalent gate circuit

FIM